ACCESSORIES

INCANDESCENT INDOOR ROUND THERMOPLASTIC REMOTE HEADS

ILLUMINATION

- *Smooth chrome-plated metalized reflector with glass lens for optimal light distribution.*
- *Adjustable lamp heads with 6V and 12V wedge base incandescent lamps.*

ELECTRICAL

- *Powered from low voltage power source with low voltage wiring (not provided).*

MOUNTING

- *Universal mounting adapter plate included. Mounts to single-gang switch box.*
- *Distance of maximum run is determined by system voltage, wire gauge and total maximum wattage on the run.*
- *Suitable for wall or ceiling mount.*

HOUSING

- *Injection-molded, engineering grade, 5VA flame retardant, high-impact resistant, thermoplastic in white or black finish.*

WARRANTY / LISTING

- *Five year warranty.*
- *Meets UL924, NFPA 101 Life Safety Code, NEC, OSHA, Local and State Codes.*

DIMENSIONS

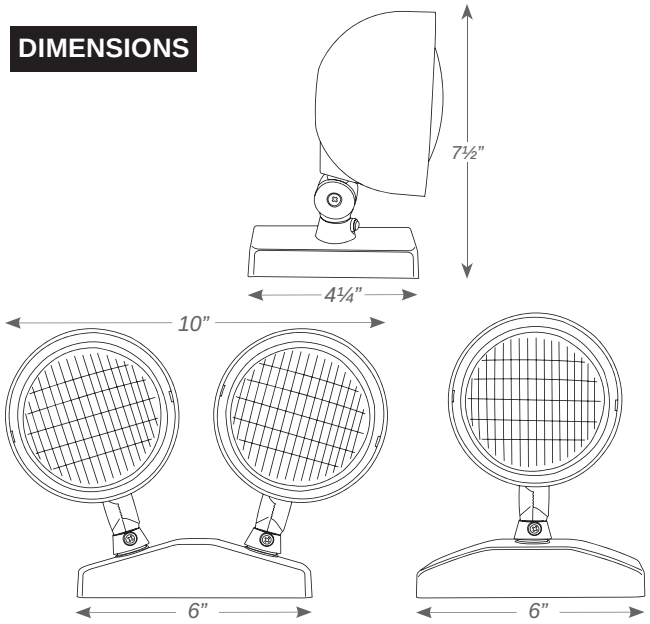

FIXTURE COMPATIBILITY CHART

Reference individual unit equipment specification sheets for remote load capacity availability.

MODEL TYPE	6V	12V
NYDXR-50		X
RMR-16-65	X	
RMR-16-125		X
R-5HO	X	
R-16-HO	X	
DXR-65/610	X	
LEDCADXR	X	
LEDSDXR	X	
CWLEZXTE-RC	X	
CAR-65	X	
CAR-125		X

MODEL TYPE	6V	12V
TFX-2	X	
NYDXR-27	X	
EZXTE-RC	X	
CXTE-RC	X	
DXR-125/1210		X
CALEDCXTE	X	
CADXR-65/610	X	
CADXR-125/1210		X
LEDCADXR	X	